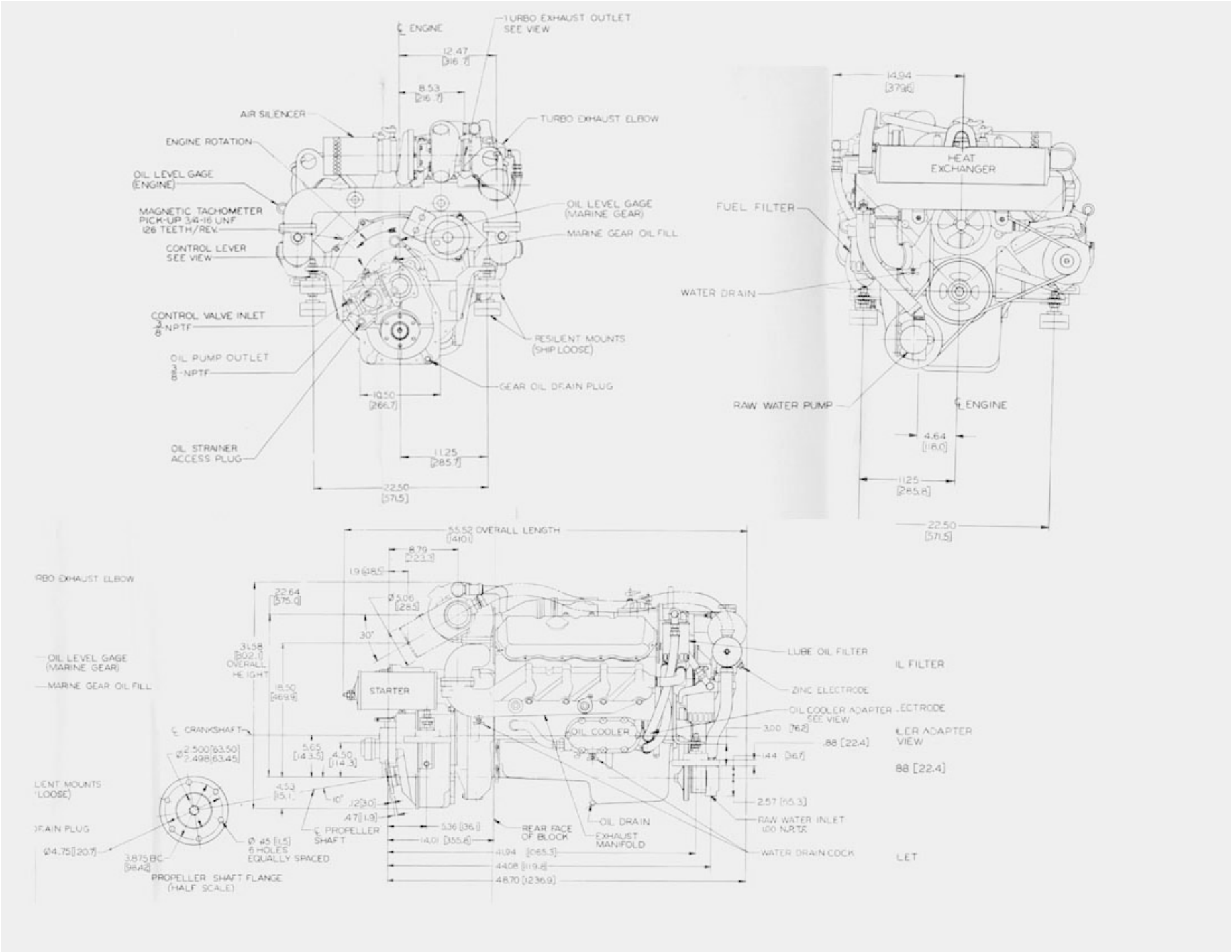
℄ ENGINE
TURBO EXHAUST OUTLET SEE VIEW
12.47 [316.7]
8.53 [216.7]
AIR SILENCER
TURBO EXHAUST ELBOW
ENGINE ROTATION
OIL LEVEL GAGE (ENGINE)
MAGNETIC TACHOMETER PICK-UP 3/4-16 UNF 126 TEETH/REV.
OIL LEVEL GAGE (MARINE GEAR)
MARINE GEAR OIL FILL
CONTROL LEVER SEE VIEW
CONTROL VALVE INLET 3/8 NPTF
RESILIENT MOUNTS (SHIP LOOSE)
OIL PUMP OUTLET 3/8 NPTF
GEAR OIL DRAIN PLUG
10.50 [266.7]
OIL STRAINER ACCESS PLUG
11.25 [285.7]
22.50 [571.5]
14.94 [379.6]
HEAT EXCHANGER
FUEL FILTER
WATER DRAIN
RAW WATER PUMP
℄ ENGINE
4.64 [118.0]
11.25 [285.8]
22.50 [571.5]
55.52 OVERALL LENGTH [1410.1]
8.79 [223.3]
19 [482.5]
22.64 [575.0]
Ø 5.06 [128.5]
30°
31.58 [802.1] OVERALL HEIGHT
18.50 [469.9]
STARTER
℄ CRANKSHAFT
5.65 [143.5]
4.50 [114.3]
Ø 2.500 [63.50] 2.498 [63.45]
4.53 [115.1]
10°
.12 [3.0]
.47 [11.9]
℄ PROPELLER SHAFT
5.36 [136.1]
14.01 [355.8]
REAR FACE OF BLOCK
OIL COOLER
OIL DRAIN
EXHAUST MANIFOLD
41.94 [1065.3]
44.08 [1119.8]
48.70 [1236.9]
LUBE OIL FILTER
ZINC ELECTRODE
OIL COOLER ADAPTER SEE VIEW
3.00 [76.2]
.88 [22.4]
1.44 [36.7]
2.57 [65.3]
RAW WATER INLET 1.00 N.P.T.F.
WATER DRAIN COCK
Ø 4.75 [120.7]
3.875 BC [98.4]
Ø .45 [11.5] 6 HOLES EQUALLY SPACED
PROPELLER SHAFT FLANGE (HALF SCALE)
RBO EXHAUST ELBOW
OIL LEVEL GAGE (MARINE GEAR)
MARINE GEAR OIL FILL
LIENT MOUNTS LOOSE)
DRAIN PLUG
IL FILTER
ECTRODE
LER ADAPTER VIEW
88 [22.4]
LET